System Components

Vacuum stations, Central filter systems, Vacuum receivers & Piping systems

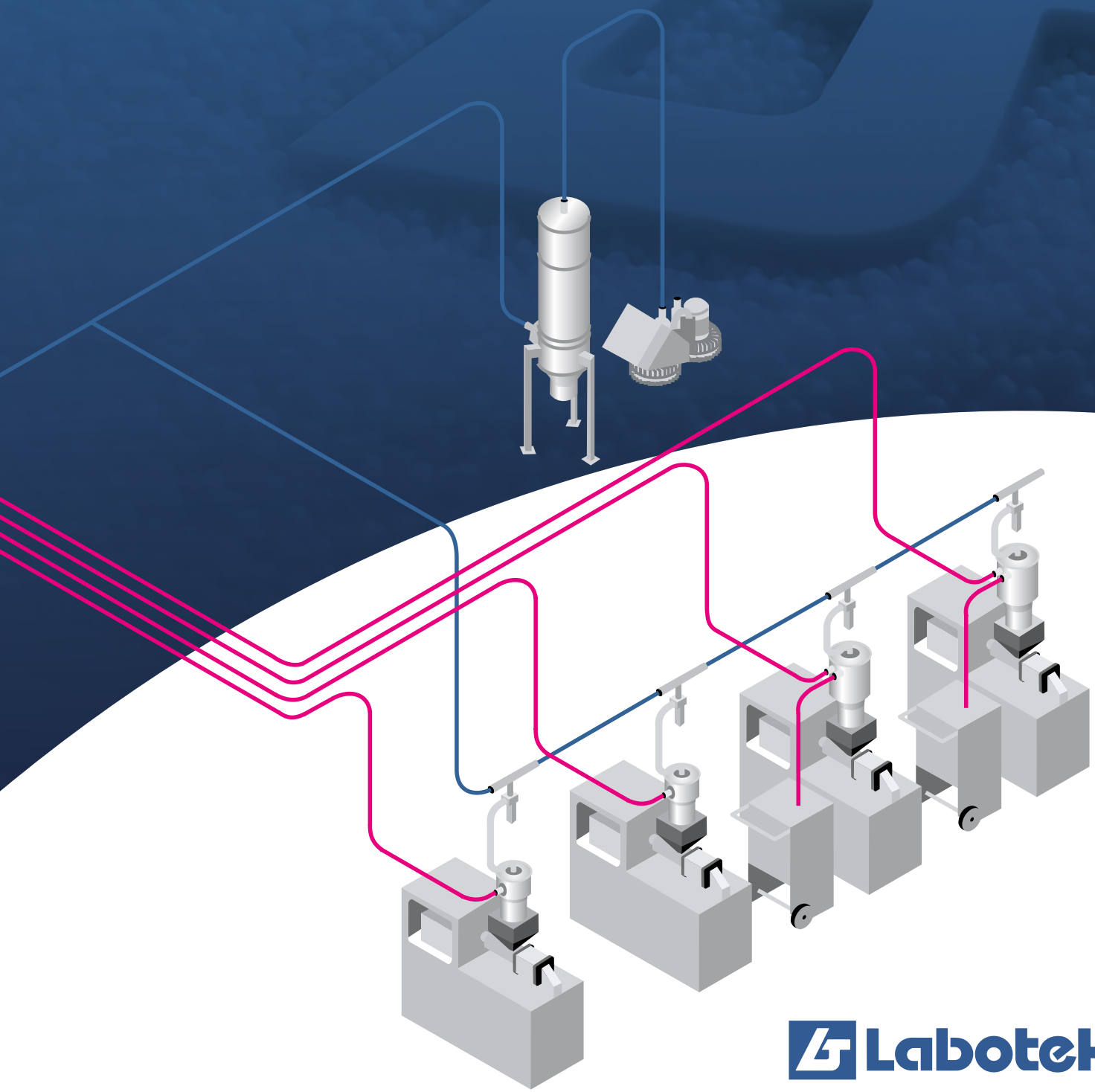

Labotek

System Components

Introduction

Labotek centralised systems are recognized for their high level of durability and performance. Labotek's advanced technology offers frequency controlled vacuum stations and dust separation technologies reduce energy requirements dramatically.

Labotek systems are quiet, maintenance free and modularly constructed with one or two blowers connected in series that maintain a deep vacuum at low air speed. Vacuum receivers type SVR are supplied in stainless steel AISI 304, with spring return vacuum valves. Vacuum receivers from Labotek can be equipped with internal or external dosing valves for regrind.

Type		kW	A	B	C	D	E	F	G
LT3		0,37	550	290	240	440	200		Ø11
LT4		1,1	590	350	300	450	220		Ø11
LT5		1,1	715	325	330	510	260		Ø11
LT6		3	685	500	370		295		Ø11
LT6x2		6.8	743	500	370	1150	295		Ø11
LT12		4	650	430	390	400	290		Ø11
LT18		4	580	618	410	387	330		Ø11
LT5	BB	1,1	715	325	330	510	260	1105	Ø11
LT6	BB	3	720	500	370		295	1480	Ø11
LT6x2	BB	6,8	743	500	370	1150	290	1480	Ø11
LT12	BB	4	650	430	400	1100	290	1330	Ø11

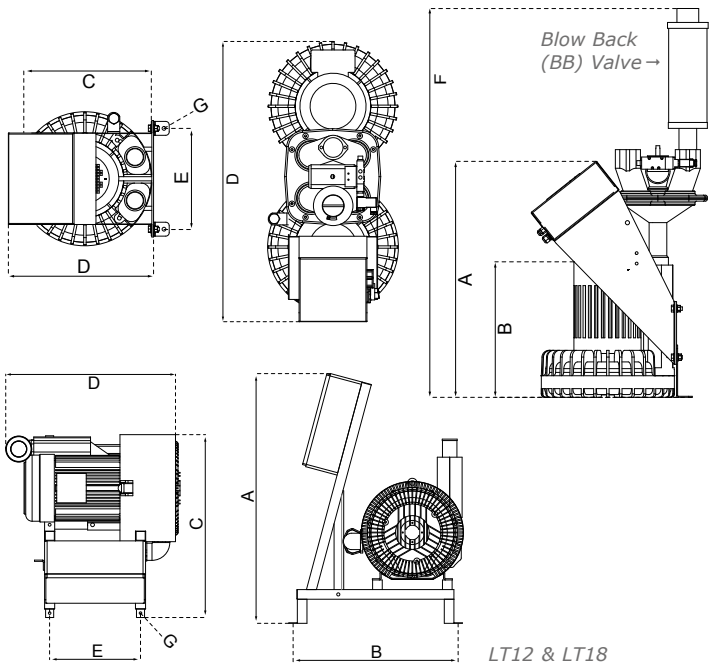

LT12 & LT18

Vacuum Stations

Labotek Vacuum stations are used either as single, double, or dry claw pump executions. This is to maintain a deep vacuum at the lowest possible air-speed, achieving gentle conditions for the polymer being conveyed.

The blowers are maintenance-free. Labotek blowers are available from 0.4 kW, with endless combination options.

Type	Length	Width	Height	Weight
CP 25	1144	515	449	240 kg
CP 30	940	500	650	300 kg
CP 40	1085	580	795	450 / 470 kg (50/60 Hz)
CP 50	1100	580	795	468 / 472 kg (50/60 Hz)

LT no.	Description	Frequency control	Material pipe
101700	SVS LT5 1.1 kW	No	Ø 38
101701	SVS LT6 3.0 kW	No	Ø 50
101713	SVS LT6 3.0 kW Blow Back	No	Ø 50
206760	Frequency Control up to 4 kW	Yes	
102270	SVS LT12 4.0 kW	Yes	Ø 50
102286	SVS LT18 Blow Back	No	Ø 65
102271	SVS LT12 4.0 kW Blow Back	Yes	Ø 50
101729	SVS CP25 5 kW	Option	Ø 50
101726	SVS CP30 6 kW	Option	Ø 50
206761	Frequency Control up to 7.5 kW	Yes	
206762	Frequency Control up to 11 kW	Yes	
101727	SVS CP40 7,5 kW	Option	Ø65
101734	SVS CP50 9,2 kW	Option	Ø65
208092	Manuel change over kit, Harting plug/socket & quick connect		Ø50
208145	Filter purge system LS50 & LN62/93		
208146	Automatic change over system each SVS, Labo-Sync		
208149	Automatic change over system each 2xSVS, Labo-Net		

Frequency Inverters

Conveying air speed may be controlled via our frequency inverter range. The frequency controller is set in % air speed; herewith each station may have its own individual air speed setting, depending on material being conveyed. Huge energy savings are obtained, raw materials are gently conveyed increasing the life span of pipe systems and hoses.

Labo-Sync

The Labo-Sync technology allows more synchronous conveying cycles simultaneously. The major advantages are higher output and higher reliability, as there is always backup vacuum available. Other important parameter is significant energy savings through the use of frequency inverters maintaining the constant vacuum level required to convey to several vacuum receivers at the same time. Smaller vacuum receivers are also an obvious benefit from the Labo-Sync systems, which are offered with Labo-Net control systems.

Central Filters

Labotek has four different filtration systems as standard. Processors may choose between either self purifying filter, dust cyclone, blow back valve, or compressed air filter cleaning.

Dust cyclone is used in medium to high dust applications, where a simple and efficient system is required. The dust cyclone is supplied with brackets for wall mounting. Dust collectors are either 3, 10 or 20 litres.

Self purifying filter is selected where dust levels are high and processors are looking for a premium filter solution. The filter is supplied on floor stand with stainless steel filter construction, large filter surface and a quick purge system in base of filter for emptying of collected dust.

The Blow back valve is designed by Labotek; the valve changes the direction of the air stream, which turns the vacuum to pressure, which cleans the filter in the vacuum receiver after and/or before each conveying cycle. At the same time the blow back valve enables a fast purge of the vacuum receiver after conveying cycle, resulting in higher conveying capacities.

Cyclone & Self cleaning Filter

LT no.	Ø	Description	A	B	C
204568	Ø 50	Cyclone 3 L	1030	774	331
204539	Ø 50	Cyclone 10 L	1025	774	331
204567	Ø 50	Cyclone 20 L	1153	774	331
208804	Ø 50	Self purifying filter	1840	1375	763
208805	Ø 65	Self purifying filter	1840	1375	763
208105	Ø 50	Self purifying filter for LT3 to LT6			
208106	Ø 50	Self purifying filter 2xLT6, LT12, LT18			

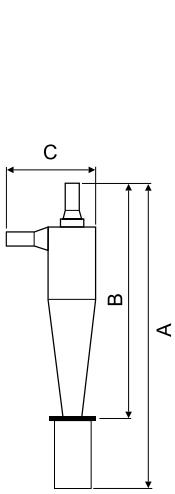

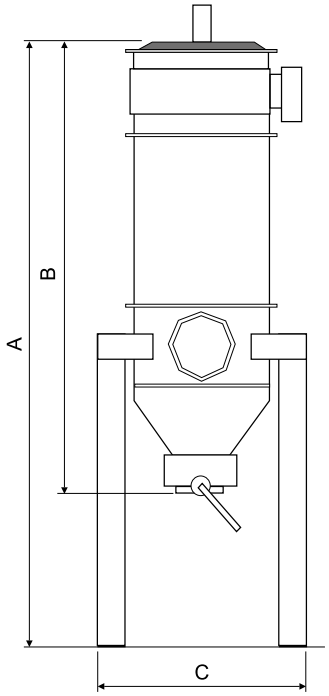

Compressed air filter cleaning

Blow Back Valve

Dust Cyclone

Self purifying Filter

Self purifying Filter

Vacuum Receivers

Labotek vacuum receivers type SVR are available in sizes ranging from 1.5 to 200 liters.
Made of high-quality AISI 304 stainless steel, they combine durability with hygienic design, making them suitable for a wide variety of applications.
With their modular construction, the receivers can easily be adapted to changing requirements – a flexible system that grows with the user's needs.

Standard level monitoring is provided via a proximity switch on the bottom flap; alternatively, the receivers can be fitted with a capacitive level sensor.
A broad selection of filter options – from cartridge filters to coarse wire screens and other variants – ensures that the receivers can be seamlessly integrated into almost any conveying task.

For demanding applications involving highly glass-filled materials, specially engineered receivers are available. These are tailored to meet the specific challenges of such materials, ensuring reliable and efficient conveying performance.

LT no.	Description	Liters	A (mm)	B (mm)
208563	SVR 1.5	1.5	180	370
204564	SVR 4	4	245	530
204565	SVR 8	8	245	570
204565-G	SVR 8	8	337	658
204566	SVR 16	16	310	650
204583	SVR 26	26	310	790
204593	SVR 50	50	310	1087
206825	SVR 50 / Ø 400	50	420	917
204627	SVR 75	75	420	1284
204628	SVR 100	100	420	1404
204629	SVR 150	150	600	1287
204630	SVR 200	200	600	1512

Labotek uses a unique vacuum valve which is remotely installed, separate from the vacuum receiver, hereby there are no pneumatic installations on the vacuum receiver. This gives an extremely simple and durable vacuum receiver design which is easy to clean and maintain.

The vacuum valve is fitted with large internal spring, which always secures a positive seal in the vacuum line, eliminating risk of vacuum leaks.

Vacuum Receiver SVR 1.5

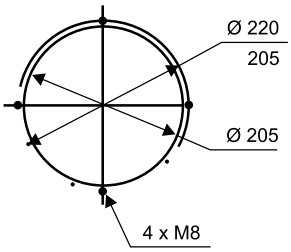

Mounting Pattern: SVR 1,5-50 L

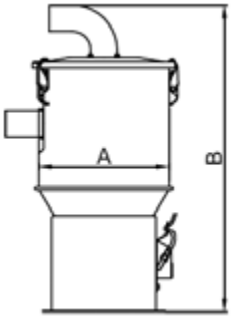

Vacuum receiver SVR 4-50

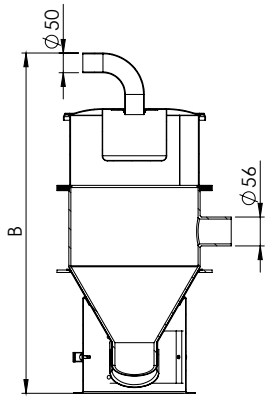

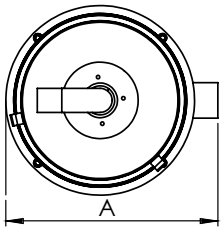

204565-G SVR 8
Vacuum receiver

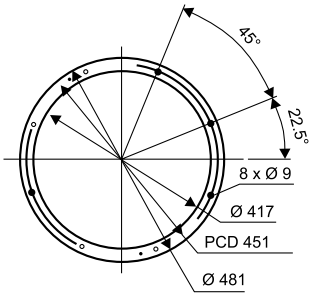

Mounting Pattern: SVR 75-200 L
& SVR 50 / Ø 400

Vacuum receiver SVR 75-200

Vacuum Valve & El-box

Local on/off

IDV

The integrated Dosing Valve type IDV is a unique built-in dosing system for non critical proportioning of two materials into the same receiver. The IDV can be used with vacuum receivers in sizes of 8, 16, 26, and 50 liters. For receivers larger than 50 liters, an external ratio selector is required.

SVR with IDV and Vacuum Valve

RS2000

RS2000 is an external mounted proportioning valve, for non critical dosing of two materials into same receiver.

The RS2000 unit is made of stainless steel AISI 304 housing and features a glass window.

RS2000

Coupling Stations

A coupling station is used when a number of different raw materials are transferred to the same production machine.

Labotek coupling stations are available in numerous combinations, even with a control monitoring function.

All fittings are made in stainless steel AISI 304 or optionally in glass execution for minimizing wear, when conveying glass reinforced materials. Labotek coupling stations are tailored to each application, our unique pipe fittings are not welded together, making it possible to expand/replace single parts.

Labotek pipe supports are supplied in 40x40 square tube with holes made through flow drill technique, securing a tidy pipe installation where all pipes are fully aligned and secure.

Coupling station with optional control monitoring feature

Example, Coupling station, 20 inlets/60 outlets

Piping Systems

Labotek piping systems are available in a number of different types of materials, based on standard pipe dimensions Ø 38, Ø 50 & Ø 65 mm, in either aluminium or stainless steel AISI 304.

Bends are made of stainless steel AISI 304, or alternatively of glass, if glass-reinforced raw materials are used.

Line cleaning valves and closed loop systems are used for the efficient emptying of pipes, protecting raw materials from absorbing unwanted moisture during conveying.

Coupling station examples

Pipes and Fittings

Dimensions	Dim.	Alu	SS
Pipe L = 6 m	Ø 38	408203	408200
Pipe L = 6 m	Ø 50	408204	408201
Pipe L = 6 m	Ø 65	408205	408202

Bend 45°	Dim.	R	LT #
	Ø 38	250	544007
	Ø 38	500	544008
	Ø 50	250	544009
	Ø 50	500	544010
	Ø 65	500	544011
		Glass	
	Ø 56*	500	544002

Bend 90°	Dim.	R	LT #
	Ø 38	250	544012
	Ø 38	500	544013
	Ø 50	250	544014
	Ø 50	500	544015
	Ø 65	500	544016
		Glass	
	Ø 56*	500	544003

**) Dimension to fit Ø 50 pipe*

	Dim.	LT #
Coupling Station	Ø 50	207011
Coupling Station	Ø 65	207013
Coupling Station, Glass	Ø 50	207012

	Dim.	LT #
Pipe Cleaning Valve	Ø 38	203459
Pipe Cleaning Valve	Ø 50	203178
Pipe Cleaning Valve	Ø 65	203184

	Dim.	LT #
T-Branch	Ø 38	544019
T-Branch	Ø 50	544020
T-Branch	Ø 65	544021
T-Branch	Ø 50 / 65	544046

	Dim.	LT #
Pipe Coupling	Ø 38	501300
Pipe Coupling	Ø 50	501304
Pipe Coupling	Ø 65	544043
Pipe Coupling for Glass bend	Ø 56 / 50	544001

	Dim.	LT #
Quick Coupling	Ø 50	204713
Quick Coupling	Ø 65	203864

	Dim.	LT #
Reduction Pipe	Ø 50 - 38	408304
Reduction Pipe	Ø 50 - 32	408306

Vacuum receivers type SVR and insulated hoppers

LT No.	Description	Capacity (L)	Design	Insulated
205115	Materialhopper, for SVR 4 & 8	2	Round	No
205116	Materialhopper, for SVR 4 & 8	5	Round	No
222302	Materialhopper incl. flange	15	Square	Yes
222303	Materialhopper incl. flange	25	Square	Yes
222304	Materialhopper incl. flange	50	Square	Yes
222305	Materialhopper incl. flange	75	Square	Yes
222306	Materialhopper incl. flange	100	Square	Yes
222307	Materialhopper incl. flange	150	Square	Yes
222308	Materialhopper incl. flange	200	Square	Yes

Material Hoppers

Labotek offers a wide range of material hoppers, available either insulated or non-insulated – for reliable storage and conveying of your raw materials. All hoppers feature a practical design, with all material contact surfaces made of high-quality stainless steel AISI 304 for maximum hygiene.

The insulated versions, with 20 mm insulation, keep preheated or dried material at the optimal temperature, even during longer waiting times at the machine inlet.

Our standard range covers volumes from 2 to 200 liters, but we are also happy to develop customized solutions for special requirements.

Insulated hoppers are equipped with a convenient sight glass for easy visual level monitoring. The lid is prepared for the installation of a Labotek vacuum receiver (SVR).

The standardized bottom flange fits most production machines, and an optional purge valve is available for efficient emptying.

Dealers Worldwide

Scan or **Click here**
to find a dealer near you.

Labotek A/S
Stroebjergvej 29
DK-3600 Frederikssund

+45 4821 8411
info@labotek.dk

www.labotek.com

3 years warranty
excluding wear parts

ISO9001 · ISO14001 Certified by DNV

The specifications in this document are subject to change without notice.

System Components-GB-09_2026