Con-Evator SVR

Individual vacuum hopper loader

for Conveying of free flowing Plastic & Powder materials

Labotek

Con-Evator SVR 4-200

Example vacuum station LT6

Example vacuum station CP25

Vacuum station CP 30-40-50

Introduction

The Labotek Con-Evator SVR is a unique series of individual vacuum hopper loaders, suitable for conveying of free flowing plastic granular materials & powders. The series comprises stainless steel vacuum receivers in sizes from 4 to 200 litres, in combination with separate vacuum blower(s) and microprocessor control.

The Con-Evator Series offers…

- Multiple configuration options.
- Lightweight stainless steel vacuum receiver AISI 304.
- Microprocessor control with LED status panel.
- 3 phase side channel blower suited for nonstop operation.
- Standard automatic filter cleaning via blower reversing or blow back valve.
- Ease of use, no need for special training.
- Prepared for optional proportioning valve.
- Max. conveyed material temperature up to 140°C (with vacuum cooler option max 180°C).
- Comprehensive 3 year warranty, excl. wear parts.

Control

A user-friendly microprocessor control shows the current operation status of the Con-Evator. The standard version uses blower reversing after each conveying cycle for filter cleaning, requiring no compressed air. For larger capacities, a pneumatic blow back valve is installed, enabling fast purge of vacuum receiver and filter cleaning in one quick sequence. Suction time, line clearing time for optional line clearing valve is easily set in control display. The control is also prepared for optional slide valve control for closed loop conveying from a drying hopper and for a optional proportioning valve for adding two materials, i.e. virgin & regrind.

Vacuum blowers

The Labotek Con-Evator comprises vacuum blower(s) installed as either single or double, depending on application, in order to maintain a deep vacuum at lowest possible airspeed, achieving gentle conditions for the polymer being conveyed. The blowers are maintenance free and available from 0.4 kW. Huge energy savings may be obtained through our series of frequency inverters, raw materials are gently conveyed and hardware piping systems/hoses have increased lifespan.

Type		kW	A	B	C	D	E	F	G
LT3		0,37	550	290	240	440	200		Ø11
LT4		1,1	590	350	300	450	220		Ø11
LT5		1,1	715	325	330	510	260		Ø11
LT6		3	685	500	370		295		Ø11
LT6x2		6.8	743	500	370	1150	295		Ø11
LT12		4	650	430	390	400	290		Ø11
LT18		4	580	618	410	387	330		Ø11
CP25	5,5		481	470	650	438			
LT5	BB	1,1	715	325	330	510	260	1105	Ø11
LT6	BB	3	720	500	370		295	1480	Ø11
LT6x2	BB	6,8	743	500	370	1150	290	1480	Ø11
LT12	BB	4	650	430	400	1100	290	1330	Ø11
CP25	5,5	BB		481	470	950	438	781	

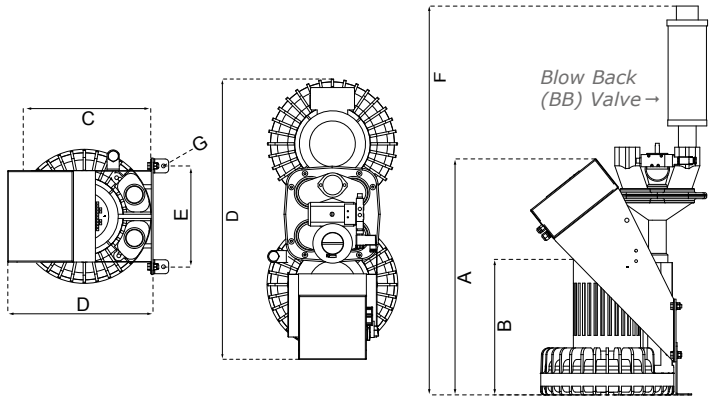

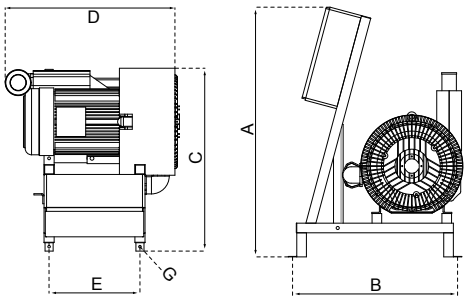

LT12 & LT18

Labotek

Filter options

There are several filter cleaning options for the Con-Evator, such as dust cyclone, blow back valve, self purifying filter and powder filter with compressed air filter cleaning. The Con-Evator may also be supplied with built-in frequency controller.

Compressed air filter cleaning

Dust Cyclone

Vacuum receivers

Labotek vacuum receivers type SVR are supplied in sizes from 4 up to 200 litres, made solely in stainless steel type AISI 304. Receivers are modular and allow users to change configuration if requirements are altered. The SVR is among the most flexible available on the market. Level of material in receiver is monitored via bottom flap read switch. The receivers caters for numerous filter types, such as cartridges, coarse wire screens and special filter for powder applications.

Part no.	Description	Litres	A (mm)	B (mm)
204564	SVR 4	4	245	530
204565	SVR 8	8	245	570
204565-G	SVR 8	8	337	658
204566	SVR 16	16	310	650
204583	SVR 26	26	310	790
204593	SVR 50	50	310	1087
206825	SVR 50 / Ø 400	50	420	917
204627	SVR 75	75	420	1284
204628	SVR 100	100	420	1404
204629	SVR 150	150	600	1287
204630	SVR 200	200	600	1512

Self purifying Filter

Self purifying Filter

Blow Back Valve

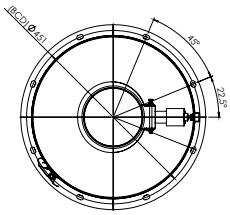

*Mounting Pattern SVR 75-200 L & 50 Powder**

Vacuum receiver SVR 75-200 L

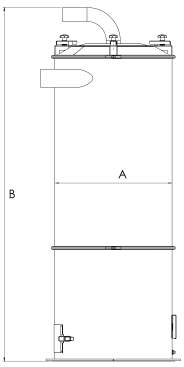

Proportioning valves IDV or RS2000 (Option)
Labotek supplies two types of proportioning valves suited for the Con-Evator SVR series. The Integrated Dosing Valve (IDV) is a unique build in dosing system for non critical proportioning of two materials into same receiver. The RS 2000 is made for external installation outside the SVR vacuum receiver. The IDV can be used with vacuum receivers in sizes of 8, 16, 26, and 50 liters. For receivers larger than 50 liters, an external ratio selector is required.

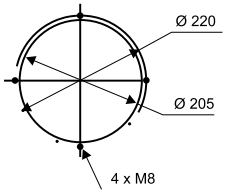

Mounting Pattern SVR 4-50 L

Vacuum receiver SVR 4-50 L

RS2000

SVR with optional IDV

Technical Data & Conveying Capacities

Type SVR	LT no.	Material/Vacuum (Each Hose: 3 m)	Motor [Kw]	Horisontal Conveying Distance [m]				Shipping information	
				1.0	30.0	54.0		Net/Gross [kg]	L/W/H [cm]
SVR 4/LT3	101404	Ø 32 / Ø 38	0.4	150	105	90	kg/h	32/42	68/56/100
SVR 8/LT3	101401	Ø 32 / Ø 38	0.4	195	137	117	kg/h	34/44	68/56/100
SVR 4/LT4	101423	Ø 32 / Ø 38	1.1	230	161	138	kg/h	35/45	68/56/100
SVR8/LT4	101406	Ø 38 / Ø 38	1.1	310	217	138	kg/h	44/54	68/56/100
SVR16/LT4	101402	Ø 38 / Ø 38	1.1	450	315	270	kg/h	46/56	68/56/100
SVR26/LT5	101409	Ø 38 / Ø 50	1.3	615	430	369	kg/h	55/65	68/56/100
SVR50/LT6	101403	Ø 50 / Ø 50	3.4	725	508	435	kg/h	85/110	120/80/130
SVR75/LT6	101441	Ø 50 / Ø 50	3.4	850	595	510	kg/h	85/105	120/80/170
SVR100/LT6	101442	Ø 50 / Ø 50	3.4	925	648	555	kg/h	90/110	120/80/170
SVR150/LT6	101443	Ø 50 / Ø 50	3.4	1005	704	603	kg/h	95/115	120/80/170
SVR200/LT6	101444	Ø 50 / Ø 50	3.4	1100	770	660	kg/h	100/120	120/80/170
SVR50/LT6 BB	101416	Ø 50 / Ø 50	3.4	1050	735	630	kg/h	85/110	120/80/170
SVR75/LT6 BB	101449	Ø 50 / Ø 50	3.4	1030	721	618	kg/h	95/110	120/80/170
SVR100/LT6 BB	101450	Ø 50 / Ø 50	3.4	1120	784	678	kg/h	100/110	120/80/170
SVR150/LT6 BB	101451	Ø 50 / Ø 50	3.4	1220	854	732	kg/h	105/125	120/80/170
SVR200/LT6 BB	101452	Ø 50 / Ø 50	3.4	1330	931	798	kg/h	110/130	120/80/170
SVR50/LT12 BB	101430	Ø 50 / Ø 50	4.0	1050	800	685	kg/h	120/145	120/80/170
SVR75/LT12 BB	102254	Ø 50 / Ø 50	4.0	1200	970	825	kg/h	110/130 30/40	120/80/130 68/56/150
SVR100/LT12 BB	102255	Ø 50 / Ø 50	4.0	1350	1050	900	kg/h	110/130 40/50	120/80/130 120/80/170
SVR150/LT12 BB	102256	Ø 50 / Ø 50	4.0	1500	1150	980	kg/h	100/120 45/70	120/80/130 120/80/170
SVR200/LT12 BB	102257	Ø 50 / Ø 50	4.0	1800	1240	1050	kg/h	100/120 55/80	120/80/130 120/80170
SVR50 BB CP25	101758	Ø 50 / Ø 50	5.5	1312	918	787	kg/h	135/160	120/80/170
SVR75 BB CP25	101759	Ø 50 / Ø 50	5.5	1750	1225	1050	kg/h	120/140	120/80/170
SVR100 BB CP25	101760	Ø 50 / Ø 50	5.5	1902	1331	1141	kg/h	120/140 40/60	120/80/170 120/80/170
SVR150 BB CP25	101761	Ø 50 / Ø 50	5.5	2067	1447	1240	kg/h	110/130 45/70	120/80/170 120/80/170
SVR200 BB CP25	101762	Ø 50 / Ø 50	5.5	2250	1575	1350	kg/h	110/130 55/80	120/80/170 120/80/170
SVR50/LT5-I, Powder	101474	Ø 50 / Ø 50	1.3	350	245	210	kg/h	80/100	120/80/130
SVR50/LT6-I, Powder	101472	Ø 50 / Ø 50	3.4	450	315	270	kg/h	90/110	120/80/130
SVR75/LT6-I, Powder	101461	Ø 50 / Ø 50	3.4	700	490	420	kg/h	95/115	120/80/170
SVR100/LT6-I, Powder	101462	Ø 50 / Ø 50	3.4	826	578	496	kg/h	100/120	120/80/170
SVR150/LT6-I, Powder	101463	Ø 50 / Ø 50	3.4	952	666	571	kg/h	105/125	120/80/170
SVR200/LT6-I, Powder	101464	Ø 50 / Ø 50	3.4	1075	753	645	kg/h	110/130	120/80/170
SVR50/LT12, Powder	101473	Ø 50 / Ø 50	1.3	844	591	506	kg/h	130/155	120/80/170
SVR75/LT12, Powder	102258	Ø 50 / Ø 50	6.8	970	679	582	kg/h	110/130 50/70	120/80/130 120/80/170
SVR100/LT12, Powder	102259	Ø 50 / Ø 50	6.8	1096	767	656	kg/h	110/130 50/60	120/80/130 120/80/170
SVR150/LT12, Powder	102260	Ø 50 / Ø 50	6.8	1222	855	733	kg/h	100/120 55/80	120/80/130 120/80/170
SVR200/LT12, Powder	102260	Ø 50 / Ø 50	6.8	1348	944	809	kg/h	100/120 65/90	120/80/170 120/80/170
SVR150, Powder CP25	101763	Ø 50 / Ø 50	5.5	1456	1019	874	kg/h	175/195	120/105/170
SVR200, Powder CP25	101764	Ø 50 / Ø 50	5.5	1585	1110	951	kg/h	175/195 60/85	120/105/170 120/80/170

Conveying capacities carried out at Labotek A/S, in metal piping system, vertical conveying distance: 5 m, max 3 m antistatic hose, Temperature: 20°C. - 2 x 90° bends, R500 mm. Description of granular material: *Round, diameter 3-5 mm. - Bulk density: 0.6 kg/l.* **Description of powder material:** *Free flowing - Temperature: 20°C. - 2 x 90° bends, R500 mm. - Bulk density: 0.665 kg/l.* **RAL color:** *5010,* **Voltage:** *3x380-480 V, 50-60 Hz, supply includes telescopic suction probe in galvanized steel, sized according to machine pipe dimension.*

Option number	Description	LT no.	Ø	A	B	C
1	Warning lamp 24 V AC (fitted on control)	206337				
2	Warning lamp 24 V AC (with 10 m cable for remote location)	203578				
3	Integrated dosing valve type IDV 4	206356				
3	Integrated dosing valve type IDV 8	206357				
3	Integrated dosing valve type IDV 16	206358				
3	Integrated dosing valve type IDV 26	206359				
3	Integrated dosing valve type IDV 50	206360				
4	Ratio-Selector , RS2000 for PGT-I/SVR-I, Ø32 w/o control, suction probe and hose	130800	Ø32			
4	Ratio-Selector , RS2000 for PGT-I/SVR-I, Ø38 w/o control, suction probe and hose	130801	Ø38			
4	Ratio-Selector , RS2000 for PGT-I/SVR-I, Ø50 w/o control, suction probe and hose	130802	Ø50			
5	Dust cyclone, 3 L	204568	Ø 50	1117	861	325
5	Dust cyclone, 10 L	204539	Ø 50	1117	861	325
5	Dust cyclone, 20 L	204567	Ø 50	1117	861	325
6	Selfpurifying filter Ø 50	208804	Ø 50	1840	1375	763
6	Selfpurifying filter Ø 65	208805	Ø 65	1840	1375	763
7	Selfpurifying filter Ø 50	208105	Ø 50			
7	Selfpurifying filter Ø 50	208106	Ø 50			
8	Pipe Cleaning Valve Ø 38	203459	Ø 38			
8	Pipe Cleaning Valve Ø 50	203178	Ø 50			
8	Pipe Cleaning Valve Ø 65	203184	Ø 65			

Cyclone & Selfcleaning Filter

Part no.	Ø	Description	A	B	C
204568	Ø 50	Cyclone 3 L	1030	774	331
204539	Ø 50	Cyclone 10 L	1025	774	331
204567	Ø 50	Cyclone 20 L	1153	774	331
208804	Ø 50	Self purifying filter	1840	1375	763
208805	Ø 65	Self purifying filter	1840	1375	763
208105	Ø 50	Selfpurifying filter for LT3 to LT6			
208106	Ø 50	Selfpurifying filter 2xLT6, LT12, LT18			

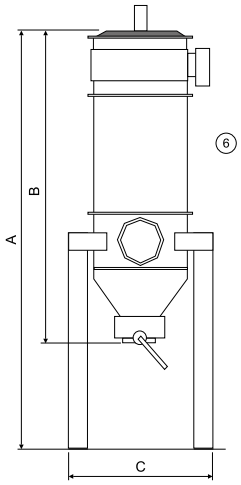

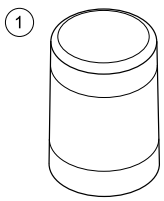

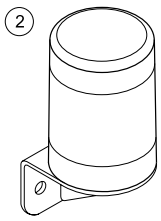

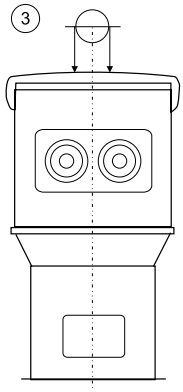

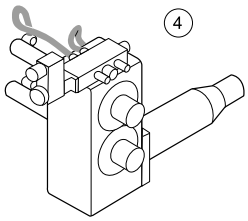

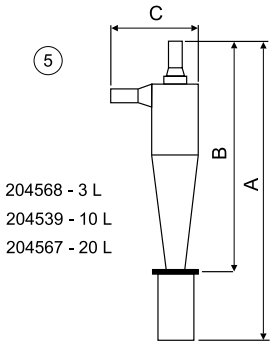

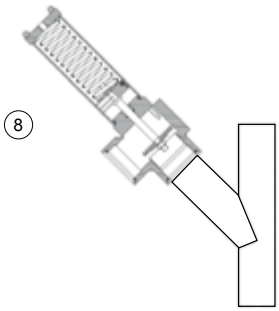

Dealers Worldwide

Scan or **Click here**
to find a dealer near you.

Labotek A/S
Stroebjergvej 29
DK-3600 Frederikssund

+45 4821 8411
info@labotek.dk

www.labotek.com

3 years warranty
excluding wear parts

ISO9001 · ISO14001 Certified by DNV

The specifications in this document are subject to change without notice.

Con-Evator-SVR-GB-09_2026